64kb Serial SPI nvSRAM

FEATURES

- **Compatible with Serial Peripheral Interface (SPI)**
- **Supports SPI Modes 0 and 3**
- **66MHz clock rate**
- **Block Write Protection**
- **Secure WRITE**
- **Secure READ**
- **2-Byte User Serial Number**
- **Hibernate Mode for low Standby Current**
- **Page and block rollover options**
- **Unlimited Read/Write Endurance**
- **Non-Volatile STORE under Instruction Control**
- **Automatic RECALL to SRAM on Power Up**
- **Unlimited RECALL Cycles**
- **100k STORE Cycles**
- **100-Year Non-volatile Data Retention**
- **2.7V to 3.6V Power Supply**
- **Commercial and Industrial Temperatures**
- **8-pin 150 mil SOIC and DFN8 Packages**
- **RoHS-Compliant**

DESCRIPTION

The Anvo-Systems Dresden ANV31A61W is a 64kb serial SRAM with a non-volatile SONOS storage element included with each memory cell, organized as 8k words of 8 bits each. The devices are accessed by a high speed SPI-compatible bus. The ANV31A61W is enabled through the Chip Enable pin ($\overline{E}$) and accessed via a 3-wire interface consisting of Serial Data Input (SI), Serial Data Output (SO) and Serial Clock (SCK). All programming cycles are self-timed, and no separate ERASE cycle is required before STORE.

The serial SRAM provides the fast access & cycle times, ease of use and unlimited read & write endurance of a normal SRAM. Dedicated safety features supporting high data accuracy.

With Secure WRITE operation the ANV31A61W accepts address and data only when the correct 2-Byte CRC, generated from the 13 bit address and 32 Byte data, is transmitted. Corrupt data cannot overwrite existing memory content and even valid data would not overwrite on a corrupted address. With status register bit 4 the success of the WRITE operation can be monitored. In case of corrupt data bit 4 will be set volatile to high. With Secure READ operation the ANV31A61W calculates the correct 2-Byte CRC parallel to data transfer. The 2Byte CRC is transmitted after 32 Bytes of data have been transmitted.

Data transfer to the non-volatile storage cells occurs when the STORE operation has been initated by STORE instruction. Data transfer from non-volatile storage elements to SRAM cells has to be initiated by RECALL instruction.

On power up, data is automatically restored to the SRAM (the Power Up Recall operation).

BLOCK WRITE Protection is enabled by programming the status register with one of four options to protect blocks.

A 2-Byte non-volatile register supports the option of a 2-Byte user defined serial number. This register is under customer control only.

Status register bit 5 will control page and block roll over modes.

BLOCK DIAGRAM

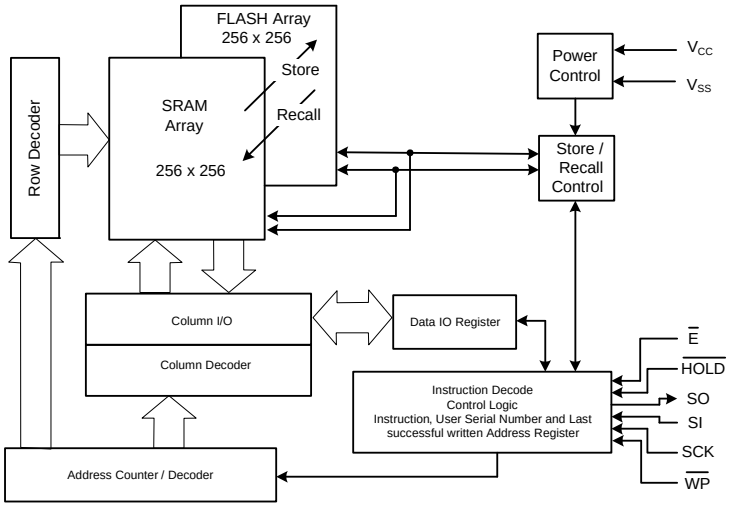

PIN CONFIGURATION

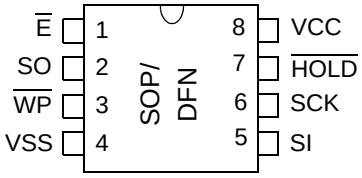

Top View

8-pin SOP 150 mil or DFN8

PIN DESCRIPTIONS

Signal Name	Signal Description
$\overline{E}$	Chip Enable
SCK	Serial Clock
SI	Serial Input
SO	Serial Output
$\overline{HOLD}$	Hold (Suspends Serial Input)
$\overline{WP}$	Write Protect
VCC	Power Supply Voltage
VSS	Ground

Serial Interface Description

Master: The device that generates the serial clock.

Slave: Because the Serial Clock pin (SCK) is always an input, the device always operates as a slave.

Transmitter/Receiver: The device has separate pins designated for data transmission (SO) and reception (SI).

Serial Output: The SO pin is used to transfer data serially out of the device. During a read cycle data is shifted out on this pin after the falling edge of the Serial Clock.

Serial Input: The SI pin is used to transfer data serially into the device. It receives instructions, addresses, and data. Data is latched on the rising edge of the Serial Clock.

Serial Clock: The SCK pin is used to synchronize the communication between a master and the device. Instructions, addresses, or data, present on the SI pin, are latched on the rising edge of the clock input, while data on the SO pin is changed after the falling edge of the clock input.

MSB: The Most Significant Bit (MSB) is the first bit transmitted and received.

Serial Op-Code: After the device is selected with $\overline{E}$ going low, the first byte will be received. This byte contains the op-code that defines the operations to be performed.

Invalid Op-Code: If an invalid op-code is received, no data will be shifted into the device, and the serial output

pin (SO) will remain in a high impedance state until the falling edge of $\overline{E}$ is detected. This will re-initialize the serial communication.

Chip Enable: The device is selected when the $\overline{E}$ pin is low. When the device is not selected ($\overline{E}$ pin is high), data will not be accepted via the SI pin, and the serial output pin (SO) will remain in a high impedance state. Unless an internal Write cycle is in progress the device will be in the Standby mode. Driving Chip Enable ($\overline{E}$) Low enables the device, placing it in the active power mode. After Power-up a falling edge on Chip Enable ($\overline{E}$) is required prior to the start of any instruction.

Write Protect: The main purpose of this input signal is to freeze the size of the area of memory that is protected against Write instructions (as specified by the values in the BP1 and BP0 bits of the Status Register) and the selected PowerStore mode. This pin must be driven either High or Low, and must be stable during all write operations. In case the Write Protect pin is not available the part cannot be hardware protected (internal high).

Hold: The HOLD pin is used in conjunction with the $\overline{E}$ pin to select the device. When the device is selected and a serial sequence is underway, HOLD can be used to pause the serial communication with the master device without resetting the serial sequence.

Connecting to the SPI Bus

These devices are fully compatible with the SPI protocol.
All instructions, addresses and input data bytes are shifted in to the device most significant bit first. The Serial Input (SI) is sampled on the first rising edge of the Serial Clock (SCK) after Chip Enable ($\overline{E}$) goes Low. All output data bytes are shifted out after any read instruction, most significant bit first. The Serial Output (SO) is latched on the first falling edge of the Serial Clock (SCK) after the instruction (such as the Read from Memory Array, Secure Read and Read Status Register instructions) has been clocked into the device.

The Figure shows four devices, connected to an MCU, on an SPI bus. Only one device is selected at a time, so only one device drives the Serial Data Output (SO) line at a time, all the others being in high impedance.

SPI BUS CONNECTION

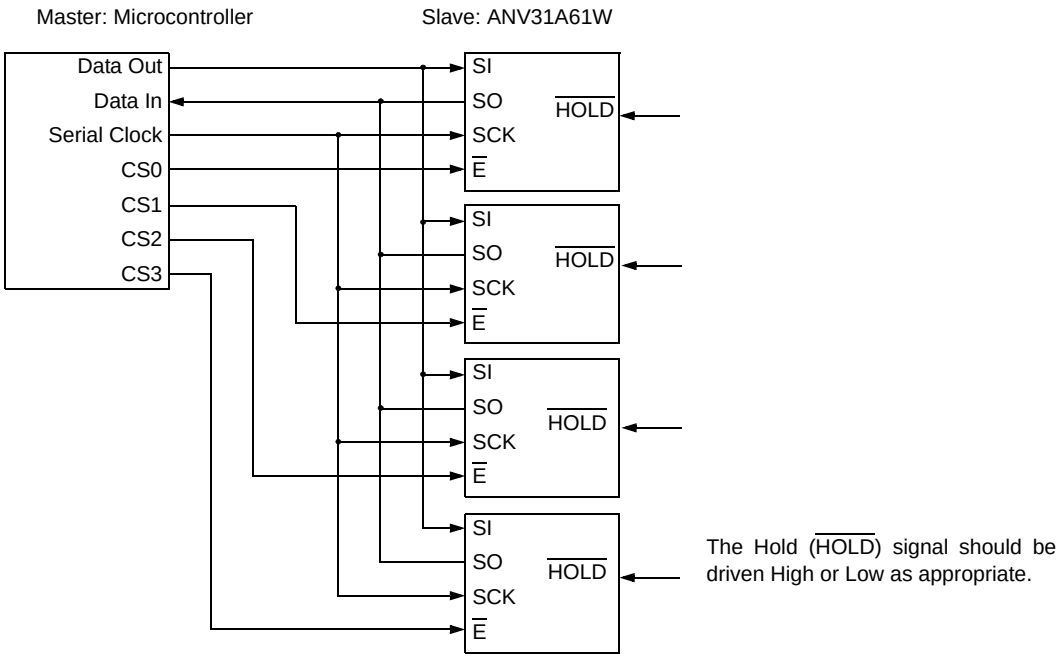

SPI Modes

Each device can be driven by a microcontroller with its SPI peripheral running in either of the following two modes:
- Mode 0: CPOL=0, CPHA=0
- Mode 3: CPOL=1, CPHA=1

For these two modes, input data is latched in on the rising edge of Serial Clock (SCK), and output data is available from the falling edge of Serial Clock (SCK). The difference between the two modes, as shown in the following figure, is the clock polarity when the bus master is in Stand-by mode and not transferring data:
- SCK remains at 0 for (CPOL=0, CPHA=0)
- SCK remains at 1 for (CPOL=1, CPHA=1)

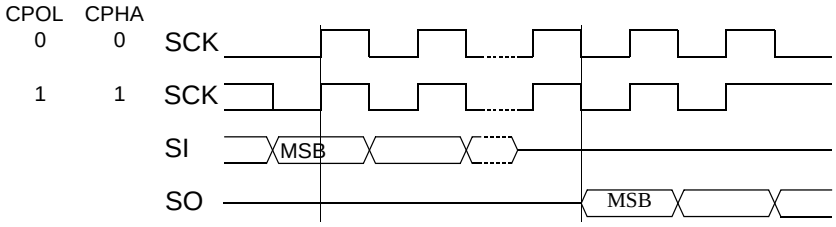

Operating Features

Power up:

When the power supply is turned on from V_{SS}, Chip Enable ($\overline{E}$) has to follow the V_{CC} voltage in accordance with the definition of V_{IH}. It must not be allowed to float, but could be connected via a suitable pull-up resistor to V_{CC}.
The Chip Enable signal ($\overline{E}$) is edge as well as level sensitive. This ensures that the device becomes deselected after Power-down until $\overline{E}$ reaches V_{CC} and a falling edge of $\overline{E}$ from the V_{IH} level has been detected thereafter. This will start the first operation.

Power On Reset:

In order to prevent data corruption and inadvertent Write operations during Power-up, all input signals will be ignored and Serial Data Output (SO) will be in high impedance state. Power On Reset is exited when V_{CC} reaches a stable V_{CCmin}. Logical signals can be applied.

Power-down / Brown Out:

When V_{CC} drops during normal operation below V_{RESET} all external operations will be disabled, the device will ignore any input signals and Serial Data Output (SO) will be in high impedance state. Power-down during self timed Store Operation will corrupt data in the memory.

Operating and Stand-by Modes:

When Chip Enable ($\overline{E}$) is Low, the device is enabled. In Operating Mode it is consuming $I_{CC(OP)}$. In the other case, when Chip Enable ($\overline{E}$) is High without prior Hibernate instruction, the device is in Standby Mode with the reduced Supply Current $I_{CC(SB)}$ and with prior Hibernate instruction the Supply Current will be with $I_{CC(HM)}$ extreme low. To exit the Hibernate mode Chip Enable ($\overline{E}$) has to go Low and after $t_{RESTORE}$ operations can be executed.

Hold Condition:

The Hold ($\overline{HOLD}$) signal suspends any serial communication with the device without resetting the clock sequence.
Serial Data Output is in high impedance state during Hold condition, $\overline{HOLD}$=Low . The other SPI-inputs are disabled and Don't Care.
The device has to be active with Chip Enable ($\overline{E}$) Low to enter the Hold condition. The device has to be selected for the duration of the Hold condition, for the selected operation to be continued after exiting the Hold condition. The Hold condition starts when Hold ($\overline{HOLD}$) becomes Low, the device is active with Chip Enable ($\overline{E}$) Low and Serial Clock (SCK) is already Low. The Hold conditions ends when Hold ($\overline{HOLD}$) goes High, the device is still active with Chip Enable ($\overline{E}$) Low and Serial Clock (SCK) is Low.
Chip Enable ($\overline{E}$) has priority over Hold ($\overline{HOLD}$). Driving Chip Enable ($\overline{E}$) High during Hold condition will reset the device. With the next falling edge of Chip Select ($\overline{E}$) a new instruction has to be submitted.

Functional Description

The device utilizes an 8-bit instruction register. The list of instructions and their operation codes are contained in the following table. All instructions, addresses, and data are transferred with the MSB first and start with a high-to-low $\overline{E}$ transition. Each instruction starts with one of the single-byte codes below.

Instruction Name	Instruction format	Operation
WREN	0000 0110	Set Write Enable Latch
WRDI	0000 0100	Reset Write Enable Latch
RDSR	0000 0101	Read Status Register
WRSR	0000 0001	Write Status Register
READ	0000 0011	Read Data from Memory Array
SECURE READ	0001 0011	Secure Read Data from Memory Array with CRC
WRITE	0000 0010	Write Data to Memory Array
SECURE WRITE	0001 0010	Secure WRITE Data to Memory Array with CRC
STORE	0000 1000	Store SRAM data non-volatile
RECALL	0000 1001	Recall non-volatile data to SRAM
WRSNR	1100 0010	WRITE User Serial Number
RDSNR	1100 0011	READ User Serial Number
Hibernate	1011 1001	Enter Hibernate Mode

Write Enable (WREN):

The device will power-up in the write disable state when V_{CC} is applied. Before any WRITE instruction is accepted, the Write Enable Latch has to be set with the WREN command.

As shown in the figure below, to send this instruction to the device, Chip Enable ($\overline{E}$) is driven Low, and the bits of the instruction byte are shifted in on Serial Data Input (SI). The device then enters a wait state, waiting for the device to be deselected, by Chip Enable ($\overline{E}$) being driven High.

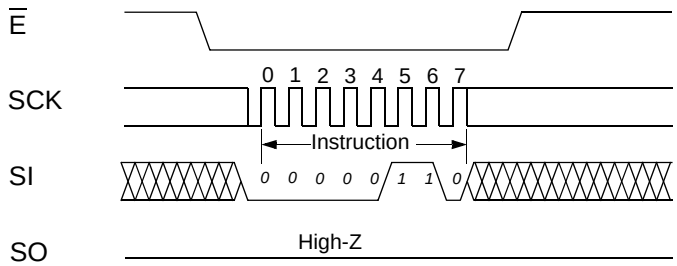

Write Disable (WRDI):

To protect the device against inadvertent writes, the Write Disable instruction disables all WRITE modes. The WRDI instruction is independent of the status of the $\overline{WP}$ pin.
As shown in the figure below, to send this instruction to the device, Chip Enable ($\overline{E}$) is driven Low and the bits of the instruction byte are shifted in, on Serial Data Input (SI). The device then enters a wait state, waiting for the device to be deselected, by Chip Enable ($\overline{E}$) being driven High.

The Write Enable Latch (WEN) bit can be reset by any of the following events:

- Power-up
- WRDI instruction execution
- WRSR instruction completion
- WRITE instruction completion
- SECURE WRITE instruction completion

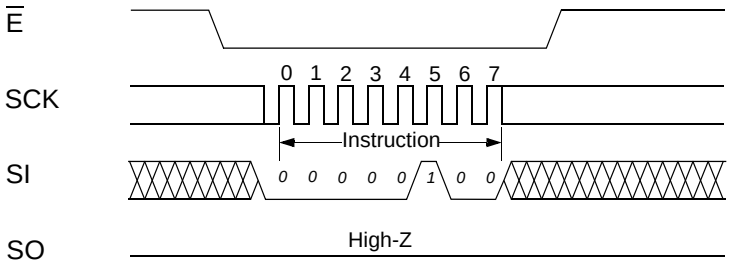

Status Register

Bit 7	Bit 6	Bit 5	Bit 4	Bit 3	Bit 2	Bit 1	Bit 0
WPEN		PRO	$\overline{\text{SWM}}$	BP1	BP0	WEN	$\overline{\text{RDY}}$

Bit	non-volatile	Definition
Bit 0 ($\overline{\text{RDY}}$)	no	The Ready bit indicates whether the memory is busy with a STORE or RECALL cycle. When set to 1, such a cycle is in progress, when reset to 0 no such cycle is in progress. It is a read only bit.
Bit 1 (WEN)	no	The Write Enable Latch bit indicates the status of the internal Write Enable Latch. When set to 1 with a Write Enable (WREN) instruction the internal Write Enable Latch is set, when set to 0 with a Write Disable (WRDI) instruction the internal Write Enable Latch is reset and no Write, Secure Write, Write Serial Number or Write Status Register instruction are accepted.
Bit 2 (BP0)	yes	The Block Protect (BP1, BP0) bits are non-volatile. They define the size of the area to be software protected against Write instructions. These bits are written with the Write Status Register (WRSR) instruction. When one or both of the Block Protect (BP1, BP0) bits are set to 1, the relevant memory area (see Write Status Register WRSR) becomes protected against all Write (WRITE, Secure WRITE) instructions to the Memory Array. The Block Protect (BP1, BP0), Write Protect Enable (WPEN) and Power Store Disable (PDIS) bits can be written provided that the Hardware Protected Mode has not been set.
Bit 3 (BP1)	yes	
Bit 4 ($\overline{\text{SWM}}$)	no	Secure WRITE Monitoring bit indicates the success of the last Secure Write operation. With $\overline{\text{SWM}}$ = 0 Secure Write was successful, with $\overline{\text{SWM}}$ = 1 data and/or address were corrupt. Secure Write was ignored. It is a read only bit.
Bit 5 ($\overline{\text{PRO}}$)	yes	Page RollOver bit is non-volatile. Set $\overline{\text{PRO}}$=0 will activate page roll over mode, with $\overline{\text{PRO}}$ = 1 the block roll over mode is selected.
Bit 6		don't care
Bit 7 (WPEN)	yes	The Write Protect Enable bit is operated in conjunction with the Write Protect ($\overline{\text{WP}}$) signal. The Status Register Write Protect Enable (WPEN) bit and Write Protect ($\overline{\text{WP}}$) signal allow the device to be put in the Hardware Protected Mode (when the Status Register Write Protect Enable (WPEN) bit is set to 1, and Write Protect ($\overline{\text{WP}}$) is driven Low). In this mode, the non-volatile bits of the Status Register become read-only bits and the Write Status Register (WRSR) instruction is no longer accepted for execution.

Read Status Register (RDSR):

The Read Status Register instruction provides access to the status register. The READY/BUSY and Write Enable status of the device can be determined by the RDSR instruction. Similarly, the Block Write Protection bits and WPEN indicate the extent of protection employed. These bits, besides RDY and WEN, are set by using the WRSR instruction. The SWM bit will be automatically set as result of an corrupt volatile data transfer in Secure WRITE and can just be reset to zero by a successful SECURE WRITE.

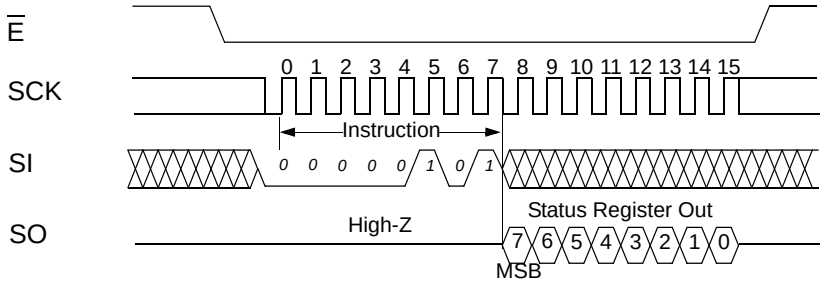

Write Status Register (WRSR):

The WRSR instruction allows the user to select Power-Store mode to be enabled or disabled as well as one of four levels of protection.

WREN command has to be sent prior to WRSR. The properties for access the Status Register are the same as the memory array. The WRSR instruction is volatile.

To make Bit2, Bit3, Bit5 and Bit7 non-volatile a STORE instruction has to follow the WRSR instruction. This STORE instruction is also valid for the memory array and all other non-volatile registers.

SWM is internally reset to 0 at the begin of each Secure WRITE operation.

The device is divided into several array segments. One quarter, one half, or all of the memory segments can be protected. Any data within any selected segment will therefore be READ only. The block write protection levels and corresponding status register control bits BP1 and BP2 are shown in the following table.

Level (Protected Block)	Status Register Bits		Array Addresses Protected
	BP1	BP0	ANV31A61W
0	0	0	None
1 (Upper quarter)	0	1	1800 - 1FFF
2 (Upper half)	1	0	1000 - 1FFF
3 (Whole memory)	1	1	0000 - 1FFF

The WRSR instruction also allows the user to enable or disable the write protect (WP) pin through the use of the Write Protect Enable (WPEN) bit. Hardware Write Protection Mode (HPM) is enabled when the WP pin is low and the WPEN bit is “1”. Hardware Write Protection Mode is disabled when either the WP pin is high or the WPEN bit is “0”. When the device is hardware write protected, writes to the Status Register, including the Block Protect bits and the WPEN bit, and the block-protected sections in the memory array are disabled. Writes are only allowed to sections of the memory which are not block-protected. When the WPEN bit is hardware write protected, it cannot be changed back to “0”, as long as the WP pin is held low .

WPEN	WP	Mode	Protected Blocks [a]	Unprotected Blocks [a]	Status Register
0	H	Software Protected SPM	Protected	Writeable	Writable, if WEN=1, BP0, BP1 and PDIS are writable
0	L		Protected	Writeable	
1	H		Protected	Writeable	
1	L	Hardware Protected HPM	Protected	Writeable	Protected, if WEN=1, no access to BP0, BP1 and PDIS

[a] As defined by the values in the Block Protect (BP1, BP0) bits of the Status Register.

$\overline{PRO}$ defines the roll over modes page or block, which are applicable only for WRITE operation. It will be ignored in case of Secure WRITE operation.
The Write Status Register (WRSR) instruction has no effect on b4 ($\overline{SWM}$), b1 (WEN) and b0 ($\overline{RDY}$) of the Status Register.
Chip Enable ($\overline{E}$) must be driven High after the eighth bit of the data byte has been clocked in. If not, the Write Status Register (WRSR) instruction is not executed.

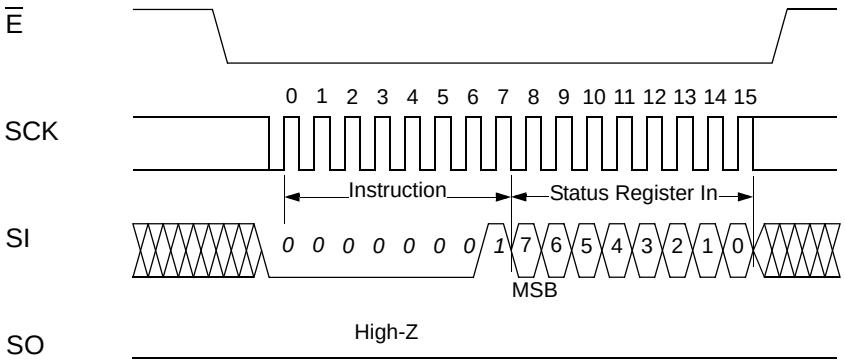

Read from Memory Array (READ):

Reading the device via the SO (Serial Output) pin requires the following sequence. After the $\overline{E}$ is pulled low to select a device, the READ operation code is transmitted via SI followed by the byte address to be read (A15 - A0, don‘t care bits are A15-A13).

Upon completion, any data on SI will be ignored. The data (D7 - D0) at the specified address is then shifted out onto SO. If only one byte is to be read, $\overline{E}$ should be driven high after the data comes out. The device is for READ operation always in block roll over mode, so that the READ sequence can be continued, the byte address is automatically incremented and data will continue to be shifted out. When the highest address is reached, the address counter will roll over to the lowest address allowing the entire memory to be read in one continuous READ cycle.
The Read cycle can be started when a WRITE or STORE cycle is not in progress and terminated at any time driving the Chip Enable ($\overline{E}$) to High.

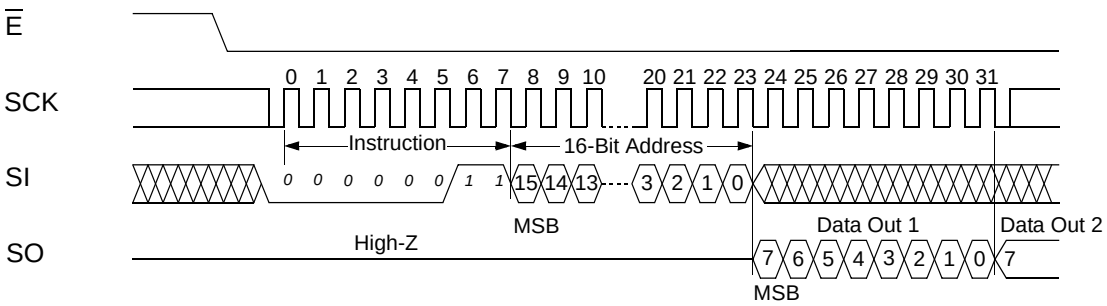

Secure Read Memory Array (Secure READ):

The secure READ operation is a 32 Byte data read out of the memory array. In parallel with the data transfer to the external bus internally a CRC is calculated, including the start address and all 32 Byte data. After last byte is read the 16 bit CRC will be clocked out on SO.

Only the actual 13 address bits are used for CRC calculation. The unused address bit is not included in the CRC calculation. The CRC16-CCITT polynomial $x^{16}+x^{12}+x^{5}+1$ is used for calculation. Page roll over is defined for Secure READ. The initial value is 0xFFFF. The checksum is transmitted with MSB first.

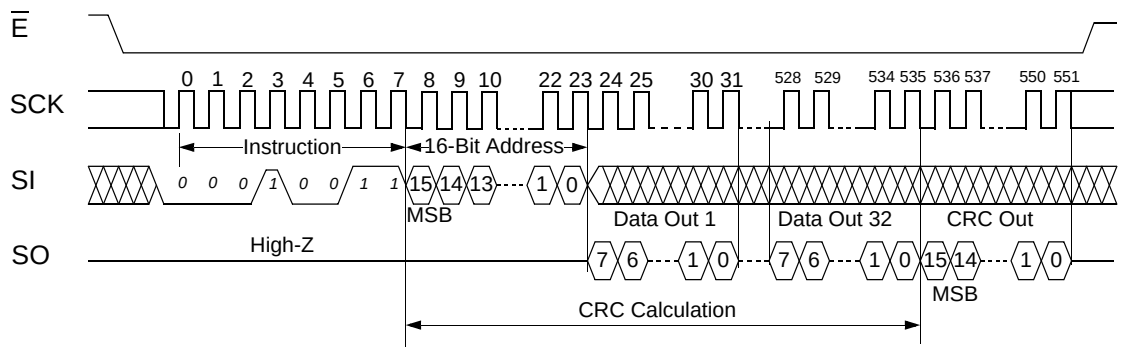

Write to Memory Array (WRITE): In order to write the device, two separate instructions must be executed. First, the device must be write enabled via the Write Enable (WREN) Instruction. Then a Write (WRITE) Instruction may be executed. Also, the address of the memory location(s) to be written must be outside the protected address field location, selected by the Block Write Protection Level.

A Write Instruction requires the following sequence. After $\overline{E}$ is pulled low to select the device, the WRITE operation code is transmitted via SI followed by the byte address (A15 - A0) and the data (D7 - D0) to be written. Write to the SRAM will start after the $\overline{E}$ pin is brought high. The Low-to-High transition of the $\overline{E}$ pin must occur during the SCK low-time immediately after clocking in the D0 (LSB) data bit, if not, the WRITE operation will not be executed.

With status register setting $\overline{PRO}$=0 the device is capable of a 32-byte PAGE WRITE operation. After each byte of data is received, the six low order address bits are internally incremented by one; the high order bits of the address will remain constant. If more than 32 Bytes of data are transmitted, the address counter will roll over and the previously written data will be overwritten. At this point in time the written data are volatile.

With the rising edge of $\overline{E}$ the previous SRAM data becomes invalid and the volatile Write operation of the data will occur. The device is automatically returned to the write disable state on completion of a WRITE cycle.

With status register setting $\overline{PRO}$=1 the block roll over mode will be applied and up to the whole memory array can be written with one command. After each byte of data is received, the address bits are internally incremented by one. Reaching the end of a page all previous written data on this page becomes valid and former SRAM data is overwritten. WRITE will be continued on next page and address bits will be internally incremented until page end. Reaching the highest address the counter will roll over. This process can be continued until all data are written.

If the device is not Write enabled (WREN), the device will ignore the Write instruction and will return to the standby state, when $\overline{E}$ is brought high. A new $\overline{E}$ falling edge is required to re-initiate the serial communication.

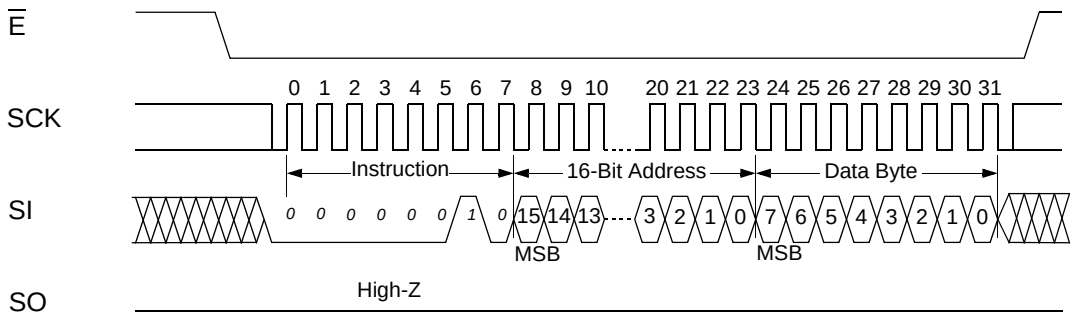

Secure WRITE Memory Array (Secure WRITE):

To enable the Secure WRITE operation a WREN has to occur first. Secure WRITE is a 32 Byte data WRITE to the memory array. A CRC is calculated, in parallel with the data transfer, from the 16 bit address and 32 Byte data. After last byte is written the 16 bit CRC has to be clocked in on SI. The actual 13 address bits will be used for CRC calculation. The CRC16-CCITT polynomial used is $x^{16}+x^{12}+x^{5}+1$. Page roll over is defined for Secure WRITE. The initial value is 0xFFFF. The checksum must be transmitted with MSB first on SI. The Low-to-High transition of the $\overline{E}$ pin must occur during the SCK low-time immediately after clocking in the CRC0 (LSB) bit, if not, the WRITE operation will not be executed. In addition the internally calculated CRC has

to match the transmitted CRC. In this case data will be accepted. If the CRC's don't match data will be ignored, the existing memory data will stay and Status Register bit 4 will be set to 1. With RDSR the success of Secure WRITE has to be checked after every Secure Write operation and bit 4 is reset to 0 at the begin of next Secure Write operation.

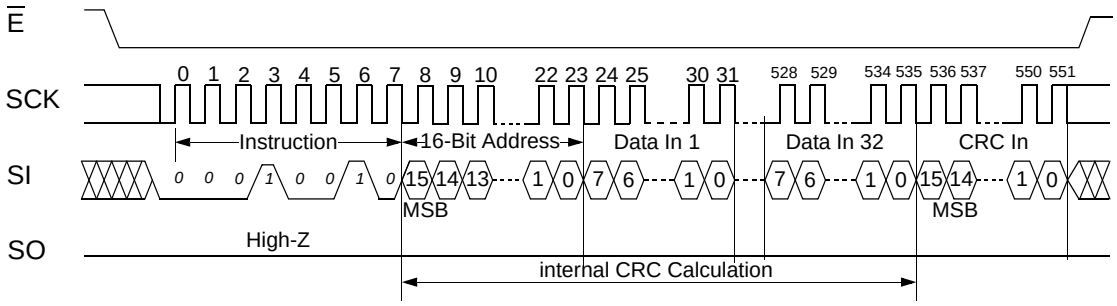

STORE

Data can be transferred from the SRAM to the non-volatile memory by a STORE command. During the STORE cycle, previous non-volatile data will be erased and then the new data stored into the non-volatile elements. Once a STORE cycle is initiated, further memory inputs and outputs are disabled until the cycle is completed. During a STORE operation, all commands will be ignored except the RDSR instruction.

The READY/BUSY status of the device can be determined by initiating a Read Status Register (RDSR) Instruction.
After the t_{STORE} cycle time has been fulfilled, the SRAM will again be activated for any READ or WRITE operations.

Instruction initiated STORE cycles are performed regardless of whether a WRITE operation has taken place after the last STORE or POWER-UP and is valid also for all non-volatile registers.

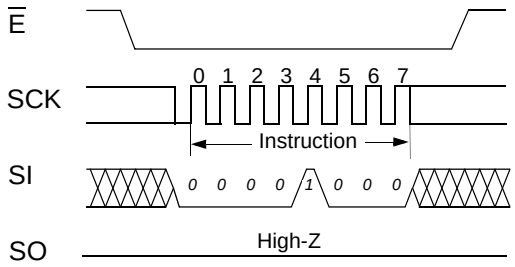

RECALL

Data can be transferred from the non-volatile memory to the SRAM by a RECALL command.

Internally, RECALL is a two-step procedure. First, the SRAM data is cleared, and second, the non-volatile information is transferred into the SRAM cells. After the t_{RECALL} cycle time, the SRAM will be activated for any operations. The RECALL operation in no way alters the data in the non-volatile storage elements.

During an Recall operation, all commands will be ignored except the RDSR instruction.

The READY/BUSY status of the device can be determined by initiating a Read Status Register (RDSR) Instruction.

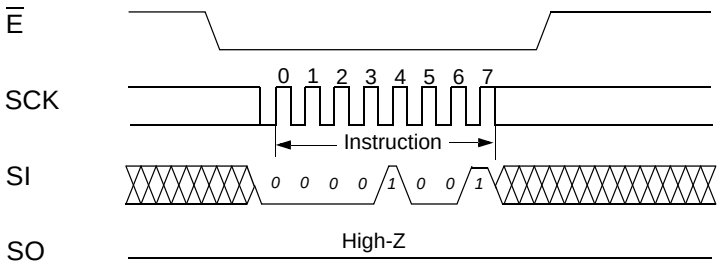

Read User Serial Number (RDSNR)

ANV31A61 supports an additional non-volatile 16 bit register for a user-controlled serial number.

With RDSNR register content can be read out.

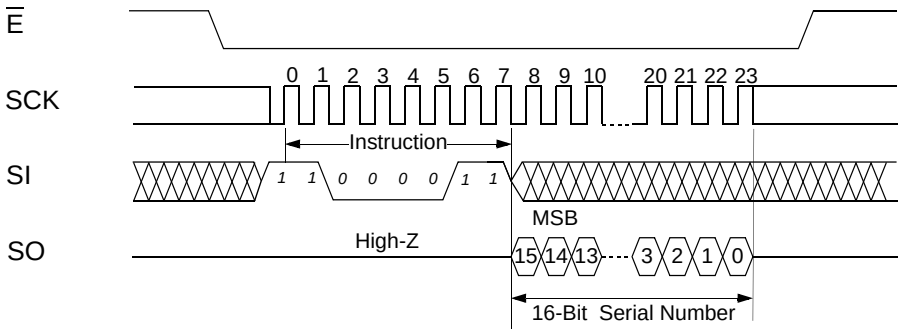

Write User Serial Number (WRSNR)

To enable the WRSNR operation a WREN has to occur first. With WRSNR a 16 bit user-controlled serial number can be written volatile to the register.

All 16 bit have to be clocked in otherwise the data will be ignored. With a STORE operation data in the register becomes non-volatile.

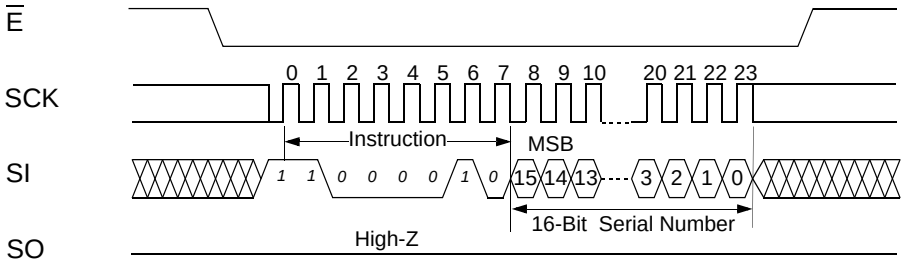

Hibernate Mode:

To enable the HIBERNATE mode the Hibernate command has to be transferred. After $\overline{E}$ goes high and any WRITE operation occurs a STORE operation will be executed. The ANV32A61 will ignore any input signals. During HIBERNATE Mode all pins, beside $\overline{E}$, are disabled and the part will consume only the current I_{SBH}. With the falling edge of $\overline{E}$ an internal Power-up Recall cycle will be initiated and after this cycle is completed the device is ready for any operation.

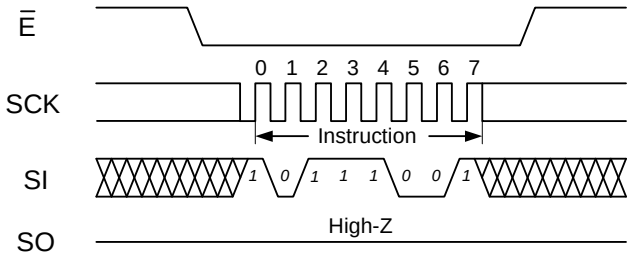

Power Up Recall:

During power up or after any low-power condition ($V_{CC}<V_{SWITCH}$), an internal RECALL request will be latched. When V_{CC} once again exceeds the sense voltage of V_{SWITCH}, a RECALL cycle will automatically be initiated and will take $t_{RESTORE}$ to complete.

During Power Up Recall operation, all commands will be ignored.

ABSOLUTE MAXIMUM RATINGS[a]

Voltage on Input Relative to Ground . . . . . –0.5V to 4.5V
Voltage on Input Relative to VSS . . . . . –0.6V to (VCC + 0.5V)
Temperature under Bias . . . . . –55°C to 125°C
Storage Temperature . . . . . –65°C to 150°C
Power Dissipation 0.5W
DC Output Current (1 output at a time, 1s duration) 15mA

a. Stresses greater than those listed under “Absolute Maximum Ratings” may cause permanent damage to the device. This is a stress rating only, and functional operation of the device at conditions above those indicated in the operational sections of this specification is not implied. Exposure to absolute maximum rating conditions for extended periods may affect reliability.

Operating Conditions

Symbol	Parameter	ANV31A61W		Unit
		Min.	Max.	
V_{CC}	Operating Voltage	2.7	3.6	V

DC CHARACTERISTICS (V_{CC} / V = 2.7 - 3.6)

SYMBOL	PARAMETER	COMMERCIAL		INDUSTRIAL		UNITS	NOTES
		MIN	MAX	MIN	MAX		
I_{CC1}[a]	Average V_{CC} Current at 66MHz		4		4	mA	Byte READ to Byte WRITE ratio 1:1 $V_{IN} \le 0.2V_{CC}$ or $\ge 0.8V_{CC}$
I_{CC2}[b]	Average V_{CC} Current during *STORE*		0.7		0.7	mA	All Inputs Don’t Care, V_{CC} = max
I_{CC3}[a]	Average V_{CC} Current at 10MHz		2		2	mA	Byte READ to Byte WRITE ratio 1:1, $V_{IN} \le 0.2V_{CC}$ or $\ge 0.8V_{CC}$
I_{SB1}[c]	Average V_{CC} Current Standby		0,3		0,3	mA	$\overline{E} \ge V_{IH}$, Cycling input levels
I_{SB2}[c]	V_{CC} Standby Current		200		200	µA	$\overline{E} \ge (V_{CC} - 0.2V)$ All Others $V_{IN} \le 0.2V$ or $\ge (V_{CC} - 0.2V)$
I_{SBH}	Hibernate Standby Current		3		3	µA	
I_{ILK}	Input Leakage Current		±3		±3	µA	V_{CC} = max $V_{IN} = V_{SS}$ to V_{CC}
I_{OLK}	Off-State Output Leakage Current		±3		±3	µA	V_{CC} = max $V_{IN} = V_{SS}$ to V_{CC}, $\overline{E} \ge V_{IH}$
V_{IH}	Input Logic “1” Voltage	$0.8V_{CC}$	V_{CC} + 0.5	$0.8V_{CC}$	V_{CC} + 0.5	V	All Inputs
V_{IL}	Input Logic “0” Voltage	V_{SS} – 0.5	$0.2V_{CC}$	V_{SS} – 0.5	$0.2V_{CC}$	V	All Inputs
V_{OH}	Output Logic “1” Voltage	V_{CC}-0.5		V_{CC}-0.5		V	I_{OUT} = – 0.4 mA
V_{OL}	Output Logic “0” Voltage		0.4		0.4	V	I_{OUT} = 2 mA
T_A	Operating Temperature	0	70	-40	85	°C	
NV_C	non-volatile STORE operations	100		100		K	
$DATA_R$	Data Retention	100		100		Years	@55 °C

Note a: I_{CC1} and I_{CC3} are dependent on output loading and cycle rate. The specified values are obtained with outputs unloaded.
Note b: I_{CC2} is the average current required for the duration of the respective *STORE* cycles (t_{STORE}).
Note c: $\overline{E} \ge V_{IH}$ will not produce standby current levels until any non-volatile cycle in progress has timed out.

Switching Characteristics	Symbol		Min.	Max.	Unit
	Alt.	IEC			
SCK Clock Frequency	f_{SCK}	f_C	0	66	MHz
Chip Enable Setup Time	t_{CSS}	$t_{su(E)}$	6		ns
/E High Time	t_{CS}	t_2	7		ns
/E Hold Time	t_{CSH}	$t_{h(E)}$	6		ns
Clock Setup time	t_{SKSH}	$t_{su(C)}$	3		ns
Clock High Time [d]	t_{CLH}	t_5	7		ns
Clock Low Time [d]	t_{CLL}	t_6	7		ns
Clock Rise Time	t_{RC}	t_7		100	ns
Clock Fall Time	t_{FC}	t_8		100	ns
Input Rise Time	t_{RD}			100	ns
Input Fall Time	t_{FD}			100	ns
Data Setup Time	t_{DSU}	$t_{su(D)}$	4		ns
Data Hold Time	t_{DH}	$t_{h(D)}$	4		ns
/HOLD Hold Time	t_{HH}	$t_{h(H)}$	5		ns
/HOLD Setup Time	t_{HSU}	$t_{su(H)}$	0		ns
Output Disable Time	t_{DIS}	$t_{dis(E)}$		20	ns
Clock Low to Output Valid	t_V	$t_{en(C)}$		10	ns
Output Hold Time	t_{HO}	$t_{h(D)}$	0		ns
/HOLD High to Output Low-Z	t_{LZ}	$t_{en(H)}$		10	ns
/HOLD Low to Output High-Z	t_{HZ}	$t_{dis(H)}$		10	ns

[e] $t_{CH} + t_{CL} \geq 1 / f_{SCK}$

AC TEST CONDITIONS

Input Pulse Levels . . . . . 0V to 3V
Input Rise and Fall Times . . . . . ≤ 5ns
Input and Output Timing Reference Levels 1.5V
Output Load . . . . . See Figure 1

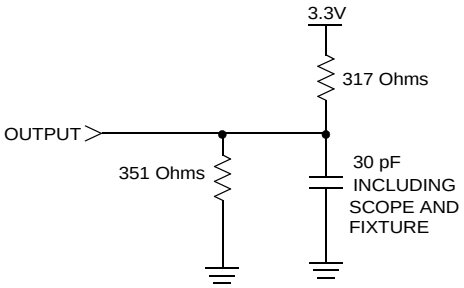

Figure 1. AC Output Loading

CAPACITANCE[d] (T_A = 25°C, f = 1.0MHz)

SYMBOL	PARAMETER	MAX	UNITS	CONDITIONS
C_{IN}	Input Capacitance	5	pF	ΔV = 0 to 3.3V
C_{OUT}	Output Capacitance	7	pF	ΔV = 0 to 3.3V

Note d: These parameters are guaranteed but not tested.

Store/POWER-UP *RECALL*

NO.	SYMBOLS		PARAMETER	ANV31A61W		UNITS	NOTES
	Standard	Alternate		MIN	MAX		
1	$t_{RESTORE}$		Power-up *RECALL* Duration		200	µs	e
2	t_{STORE}		*STORE* Cycle Duration		8	ms	
3	V_{SWITCH}		Low Voltage Trigger Level	2.35	2.65	V	
4	$t_{VCCRISE}$		V_{CC} rise time	100		µs	
5	t_{RECALL}		RECALL Duration (normal operating conditions)		50	µs	f

Note e: $t_{RESTORE}$ starts from the time V_{CC} rises above V_{SWITCH}.
Note f: VCC > VCCmin

PowerStore/POWER-UP *RECALL*

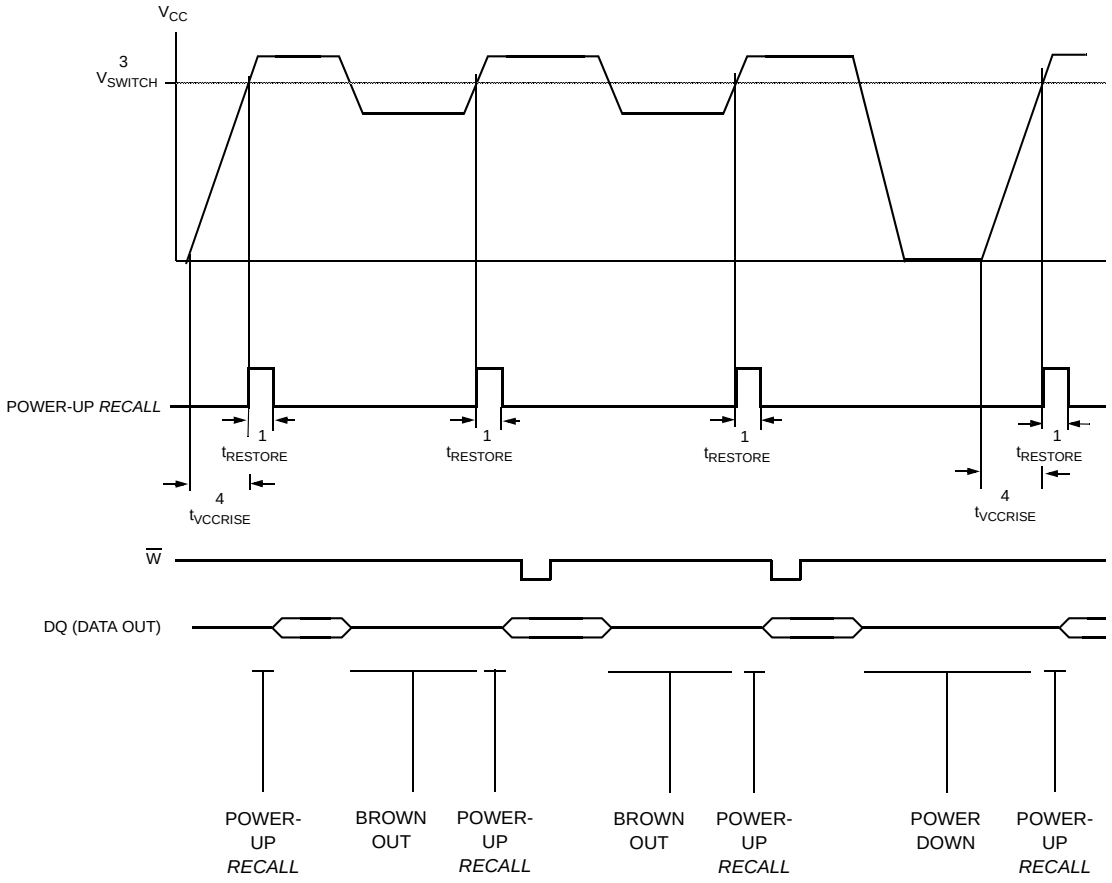

Hibernate

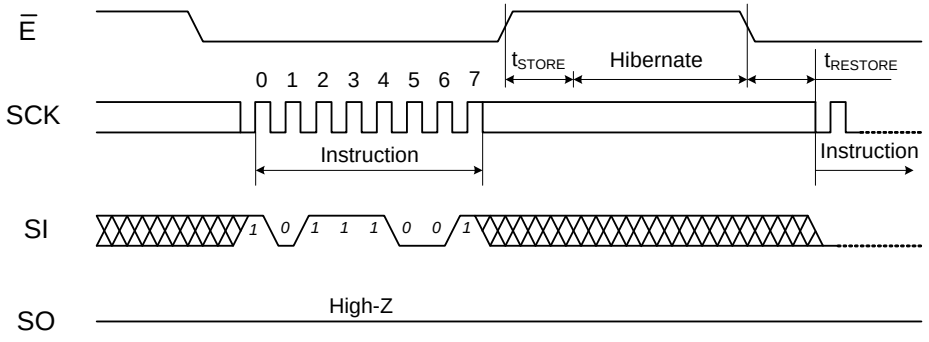

STORE/RECALL CYCLE ($V_{CC} > V_{CCmin}$)

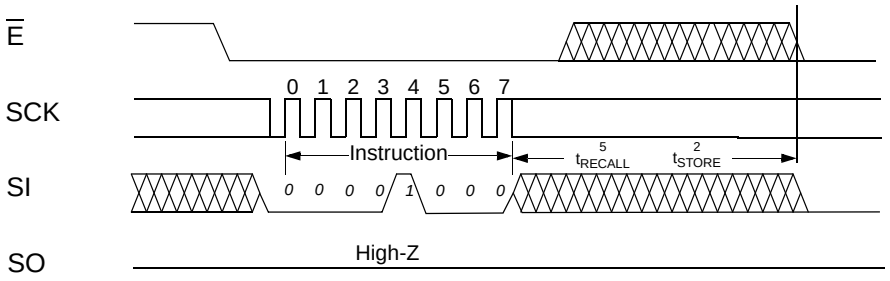

Serial Input Timing

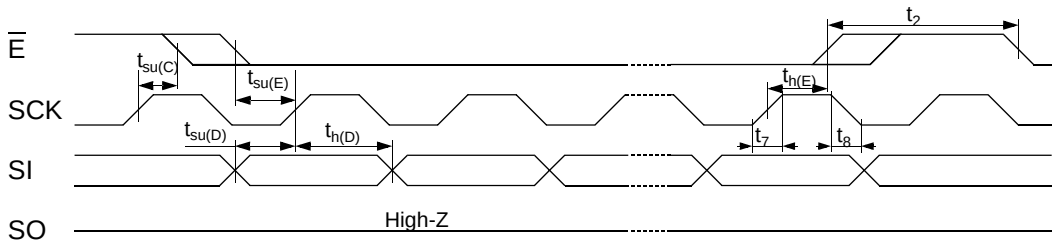

Serial Output Timing

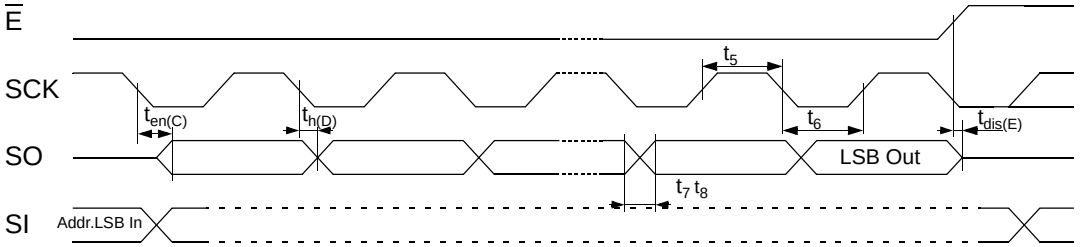

Hold Timing

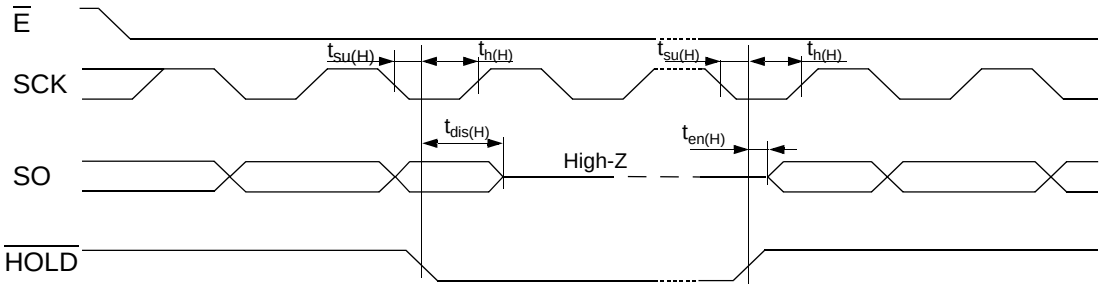

Product Versions

The ANV31A61W will be available with the feature sets:

- Supply voltage range 2.7 to 3.6V
- Hardware WRITE protection with $\overline{WP}$ pin.

Initial Delivery State

The device is delivered with Status Register 00x00xx, non-volatile memory array „0“.

NOISE CONSIDERATIONS

The ANV31A61W is a high-speed memory and so must have a high-frequency bypass capacitor of approximately 0.1µF connected between V_{CC} and V_{SS}, using leads and traces that are as short as possible. As with all high-speed CMOS ICs, normal careful routing of power, ground and signals will help prevent noise problems.

Packages

8-pin 150mil SOIC

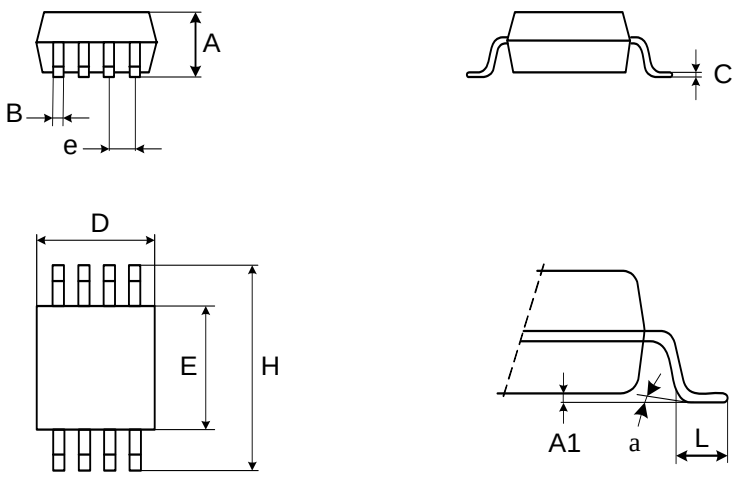

Symbol	mm			inches		
	typ..	min.	max	typ.	min.	max.
A		1.35	1.75		0.053	0.069
A1		0.1	0.25		0.004	0.010
B		0.33	0.51		0.013	0.020
C		0.19	0.25		0.007	0.010
D		4.80	5.00		0.189	0.197
E		3.80	4.00		0.150	0.157
e	1.27			0.050		
H		5.80	6.20		0.228	0.244
L		0.40	0.90		0.016	0.035
α		0°	8°		0°	8°

8-pin 5x6 DFN

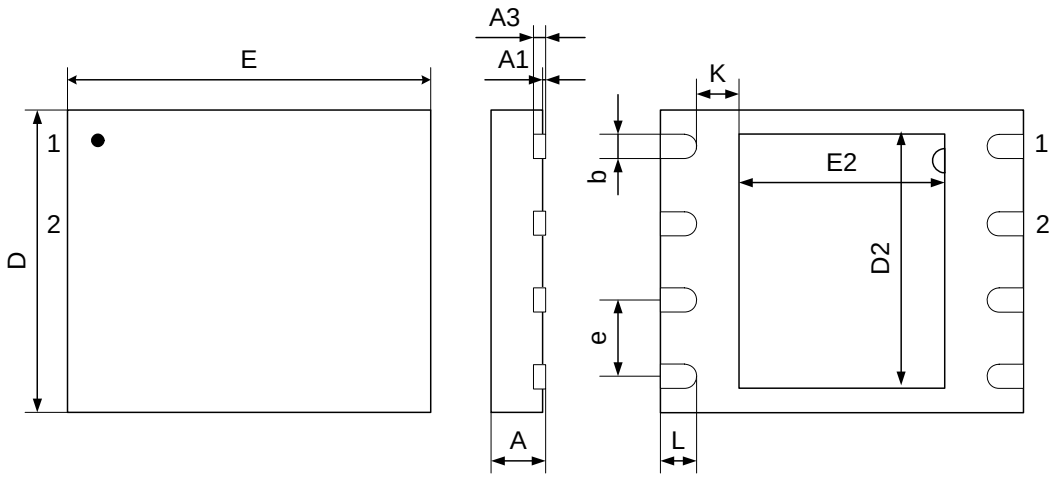

Symbol	mm			inches		
	typ.	min.	max	typ.	min.	max.
A	0.85	0.8	0.9	0.0335	0.0315	0.0354
A1	0.02	0.00	0.05	0.0008	0.0000	0.0020
A2	0.20			0.0079		
A3		0,20			0.0079	
b	0.40	0.35	0.45	00157	0.0138	0.0177
D	5.00			0.1969		
D2	4.20	4.10	4.30	0.1654	0.1614	0.1693
E	6.00			0.2362		
E2	3.40	3.30	3.50	0.1339	0.1299	0.1378
e	1.27			0.0500		
L	0.50	0.45	0.55	0.0177	0.0197	0.0217

Ordering Information

ANV 3 1 A 6 1 W S C 66 _

Lead Finish
Blank = 100% Sn (Matte Tin)

Clock Rate
66 = 66 MHz

Temperature Range
C = Commercial (0 to 70°C)
K = Industrial (-40 to 85°C)

Package
S = Plastic 8-pin 150 mil SOIC
D = Plastic 8-pin 5x6 DFN

Power Supply
W= 2.7V ... 3.6V

Interface
1 = SPI

Density
6 = 64kb

Version
A = initial version

Store Type
1 = Instruction

Memory Type
3= serial nvSRAM

Document Revision History

Revision	Date	Summary
1.0	**January 2014**	initial version
1.1	**June 2015**	update DFN8 package dimensions
1.2	**November 2015**	remove TSSOP16 package
1.3	**September 2016**	update $t_{RESTORE}$, t_{RECALL}, I_{CC1}, I_{CC3}, I_{SB1}, I_{SB2}, I_{ILK}, I_{OLK}
1.4	**July 2017**	change page size to 32 Byte
1.5	**September 2018**	remove RLSWA

Anvo-Systems Dresden ANV31A61W Datasheet, September 2018
Copyright 2018, Anvo-Systems Dresden GmbH. All rights reserved.